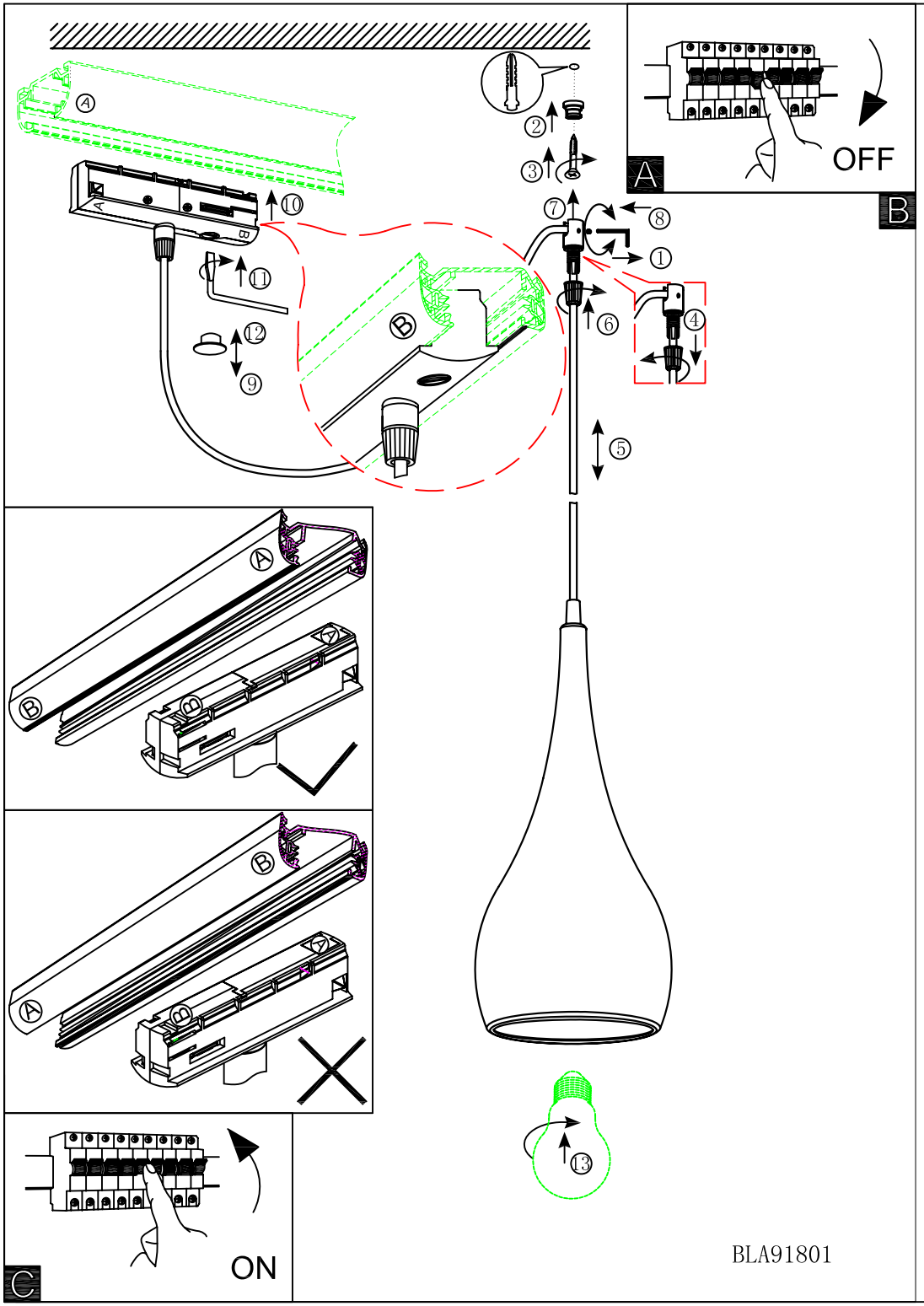
A
OFF
B
ON
C
BLA91801

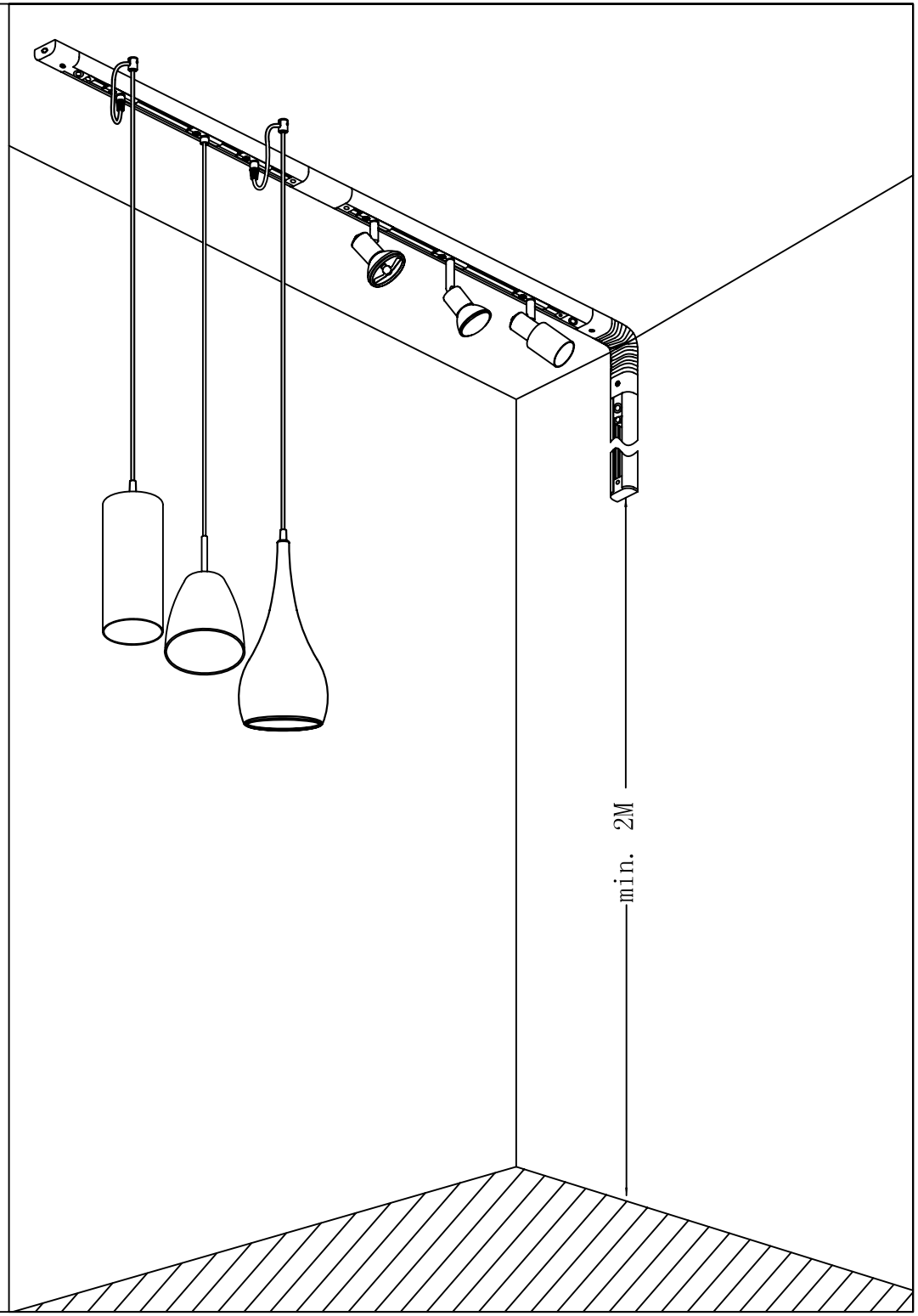
min. 2M