Art Nr.: 902175/902178

www.eglo.com
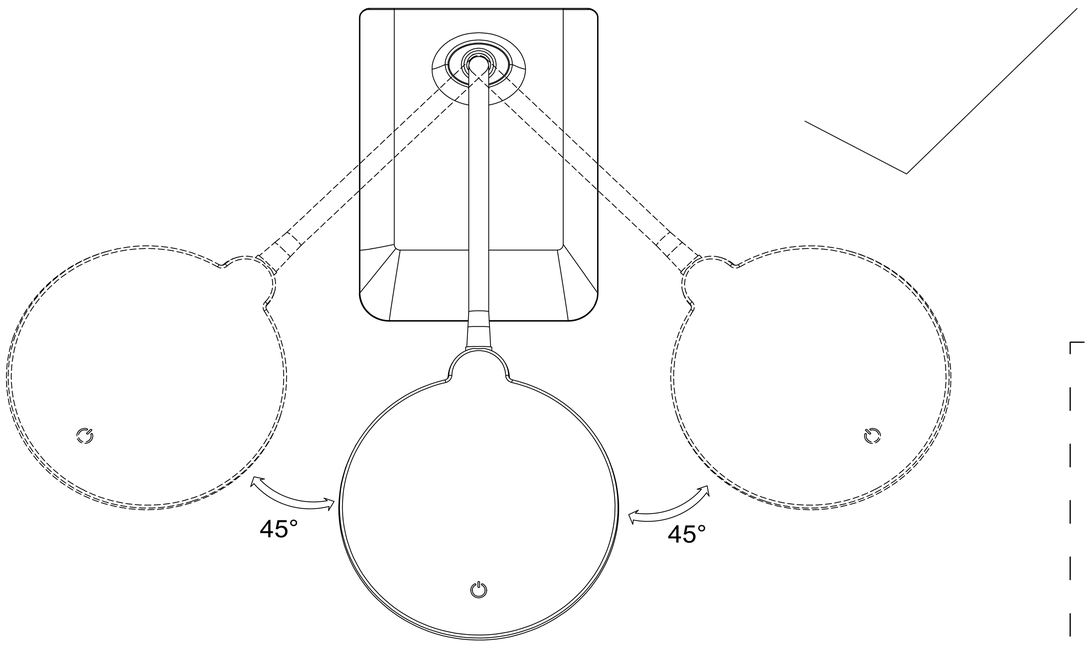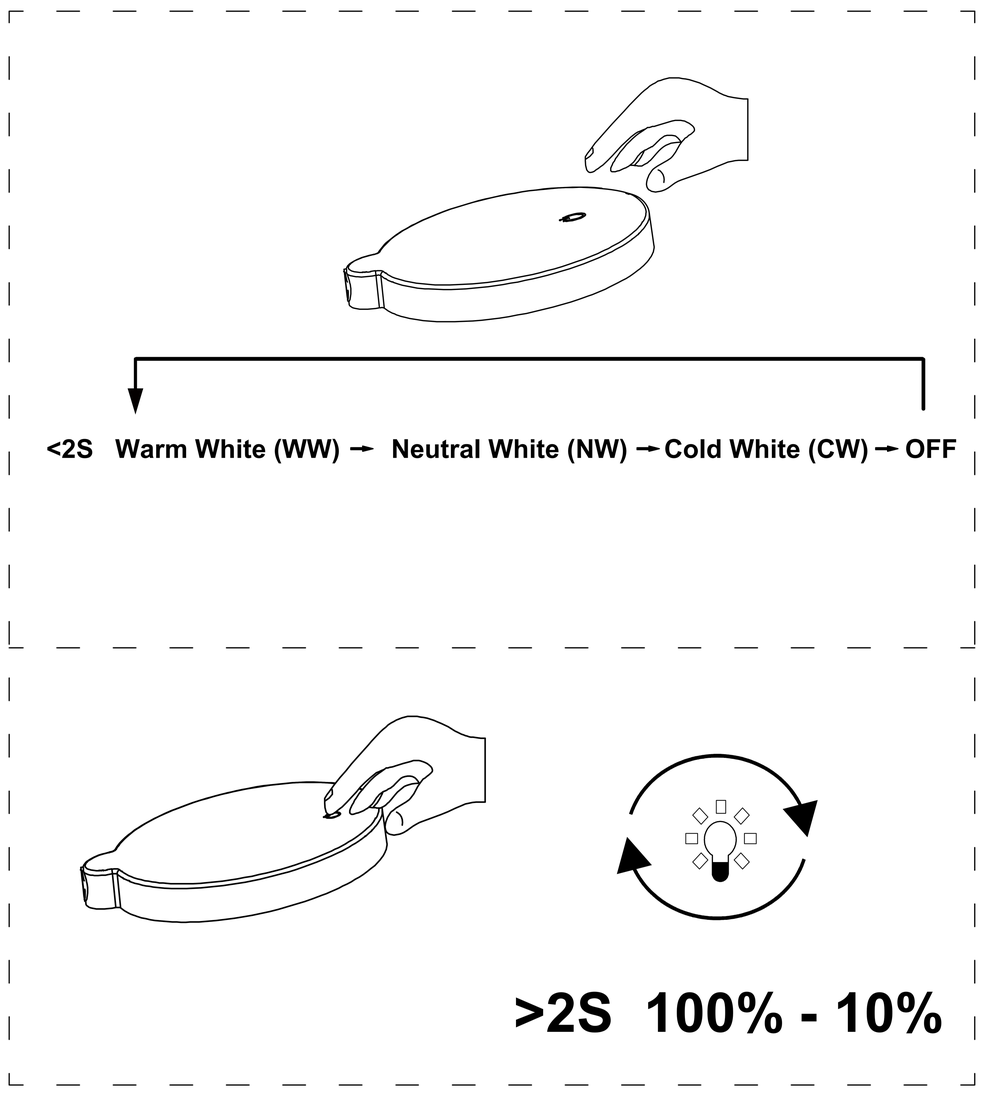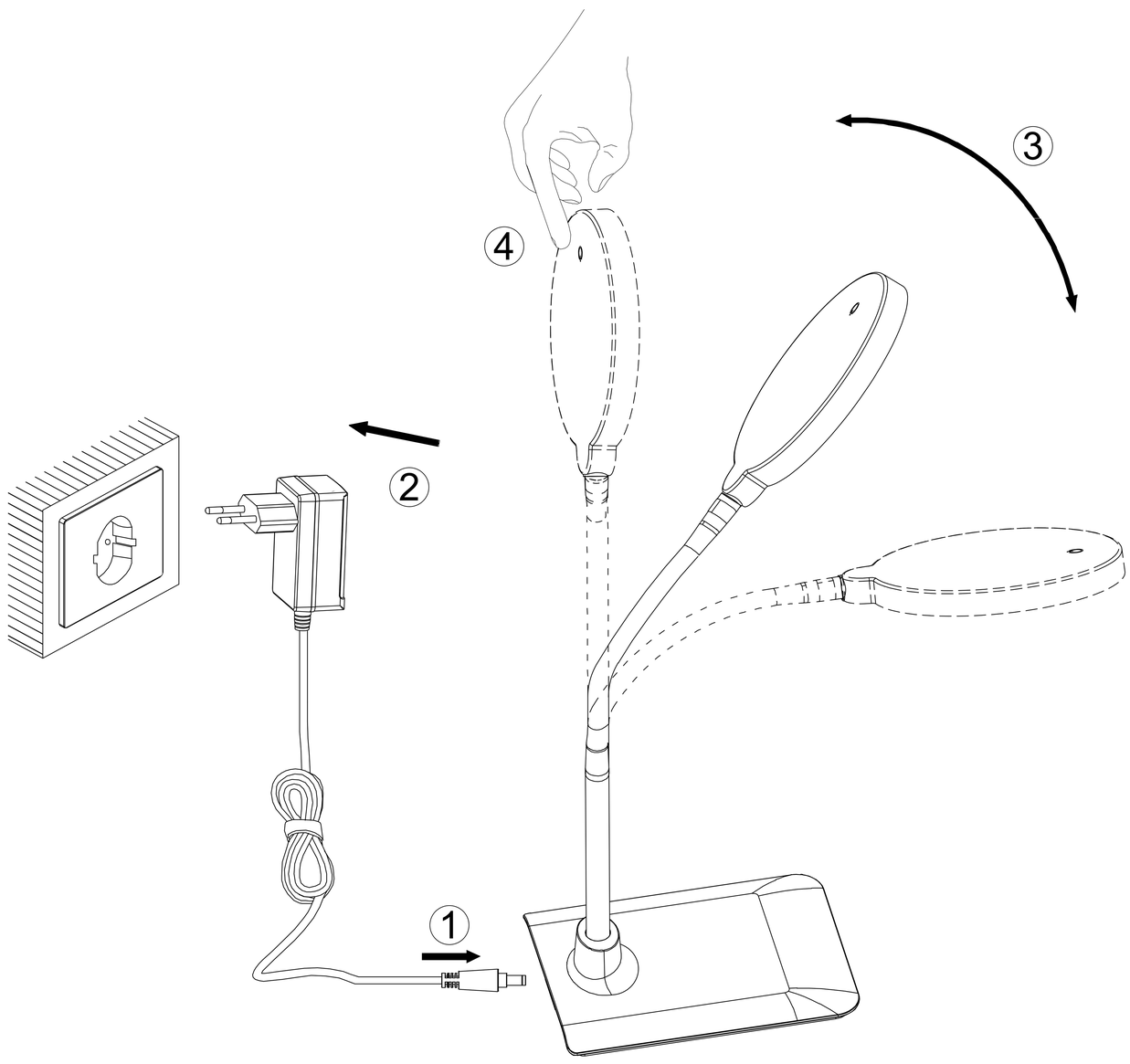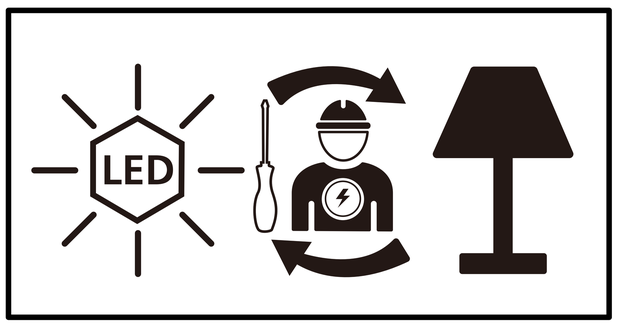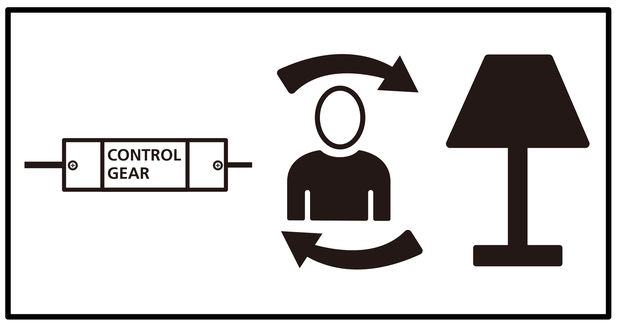
EGLO
my light | my style