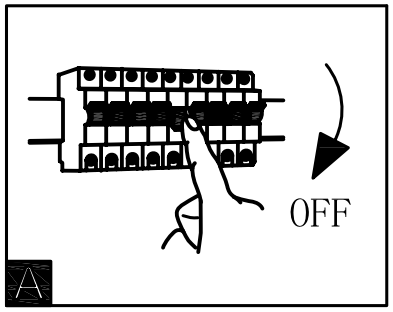
OFF
A

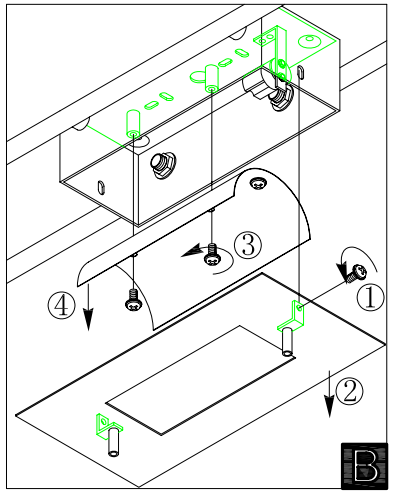
③
④
①
②
B

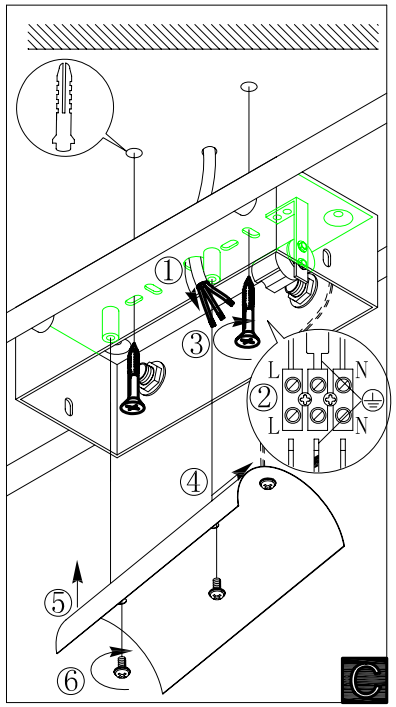
①
③
L
N
②
L
N
④
⑤
⑥
C

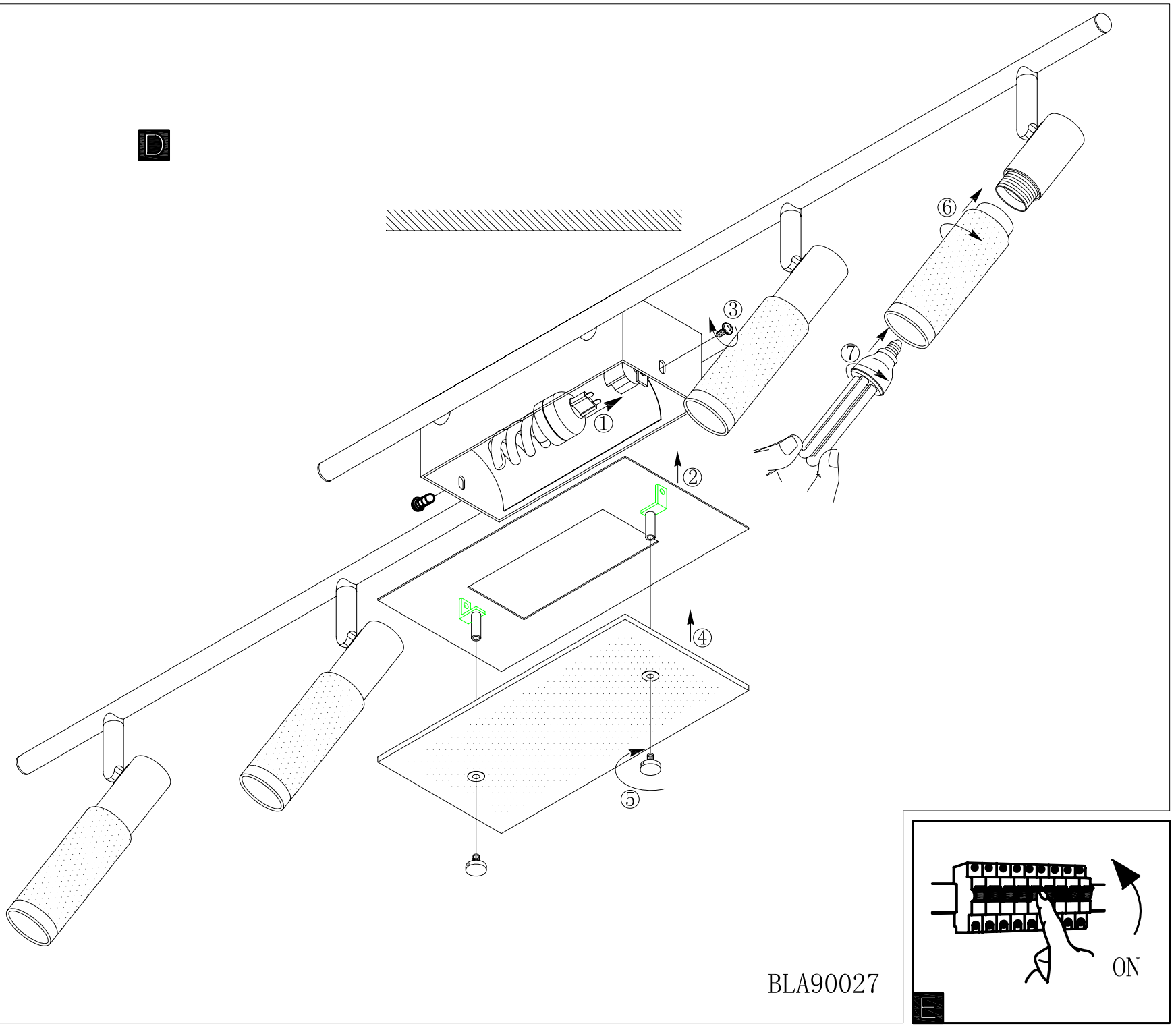
D
⑥
③
⑦
①
②
④
⑤
BLA90027

ON
E