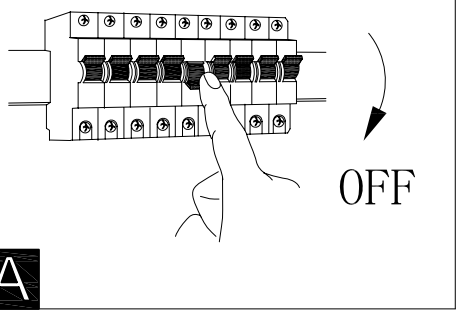

A

B

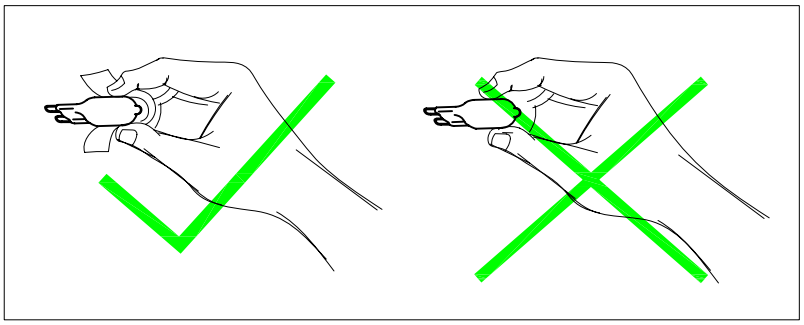

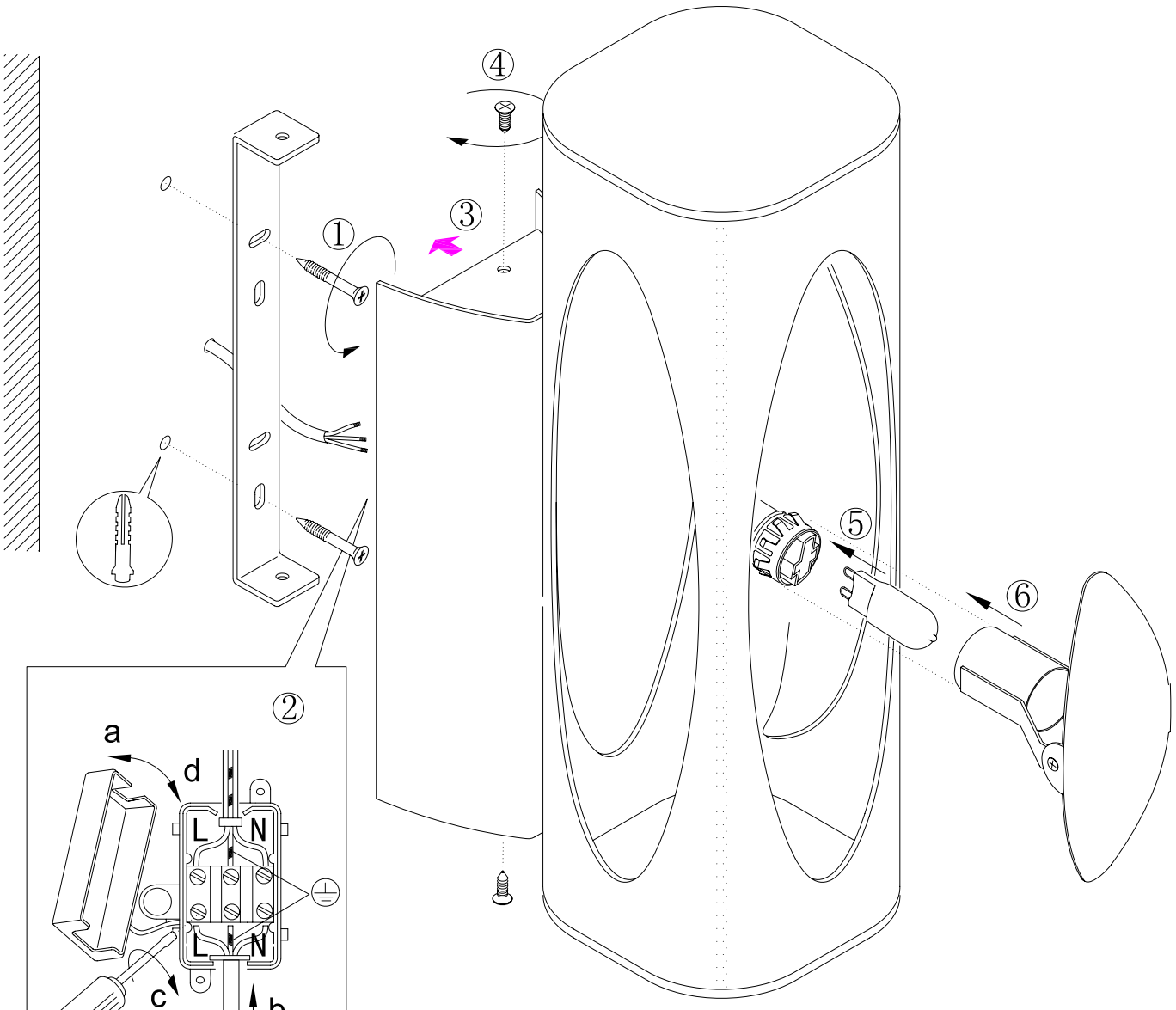

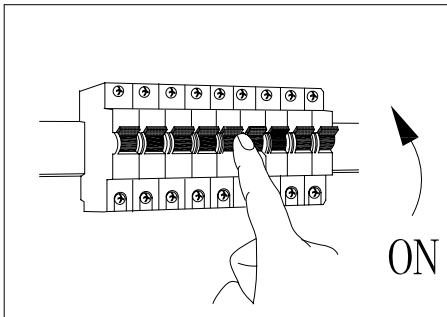

C

BLA88417