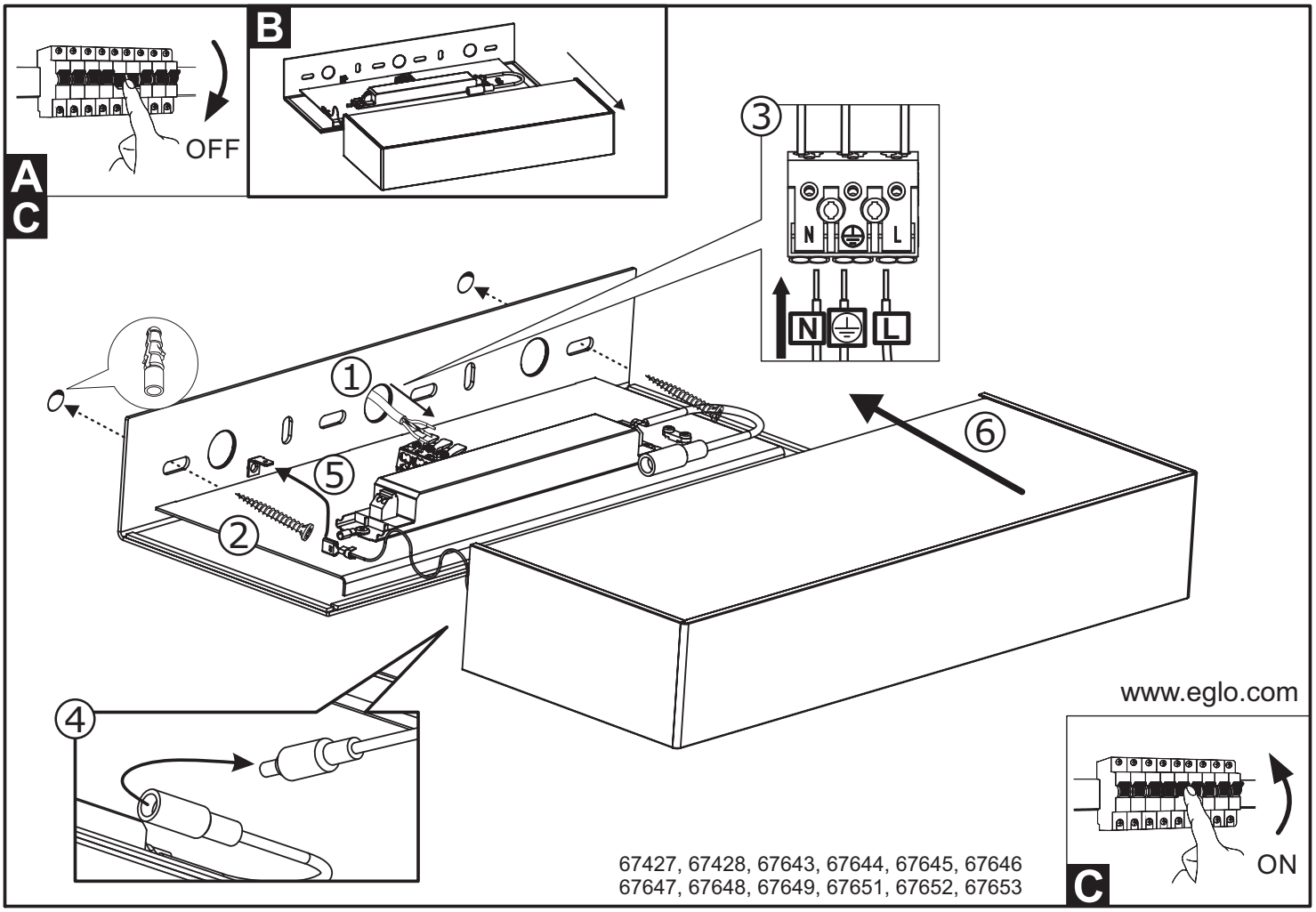
A
C
OFF
B
3
N
L
1
2
5
6
4
www.eglo.com
ON
C
67427, 67428, 67643, 67644, 67645, 67646
67647, 67648, 67649, 67651, 67652, 67653

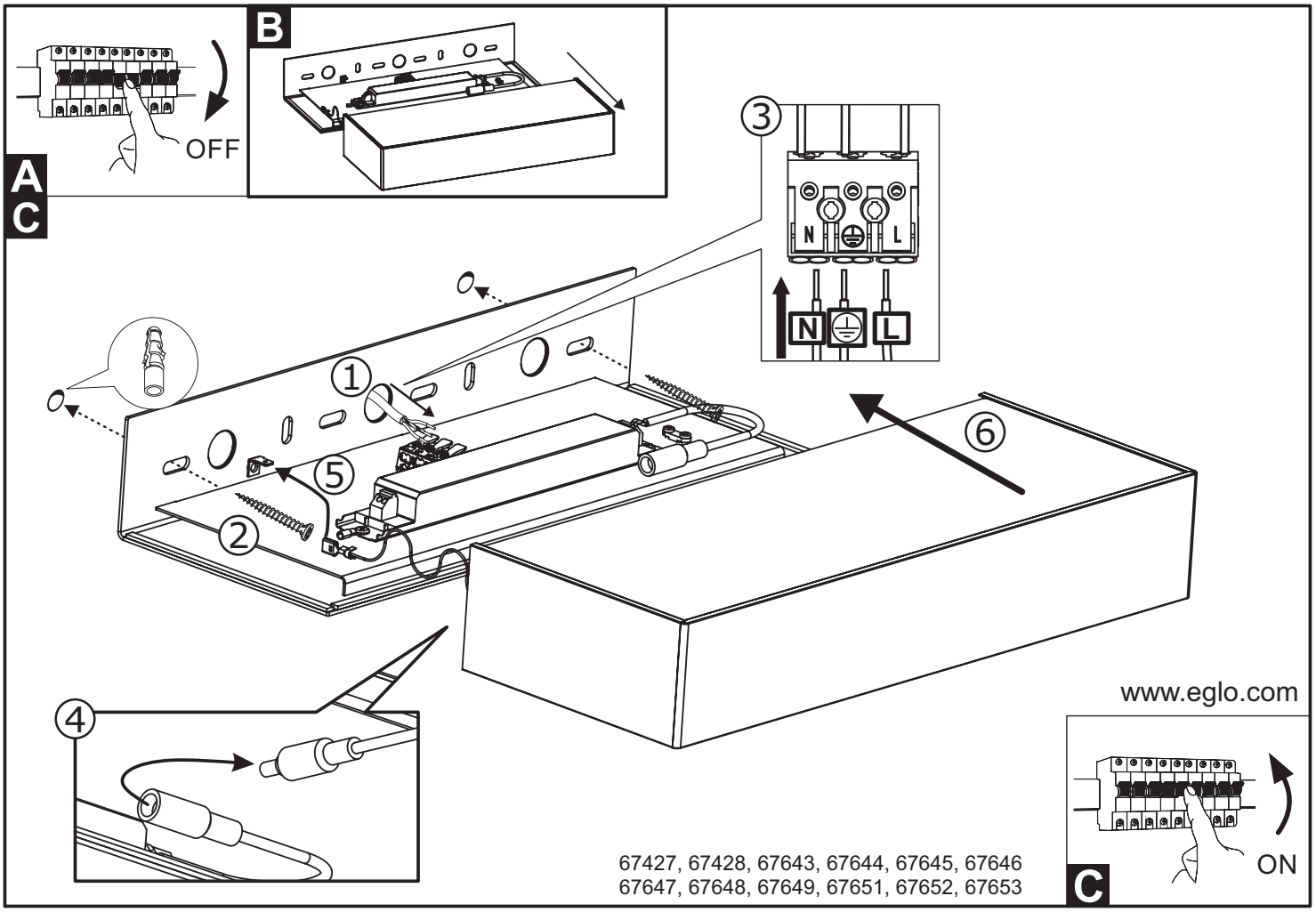
A
C
OFF
B
3
N
L
1
2
5
6
4
www.eglo.com
ON
C
67427, 67428, 67643, 67644, 67645, 67646
67647, 67648, 67649, 67651, 67652, 67653